USB-C

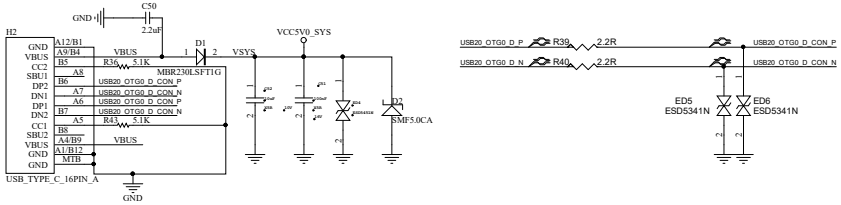

LED

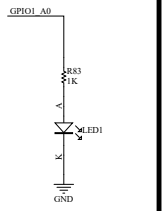

RJ45

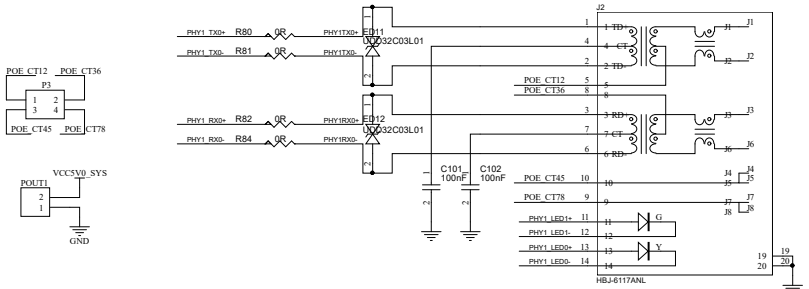

USB

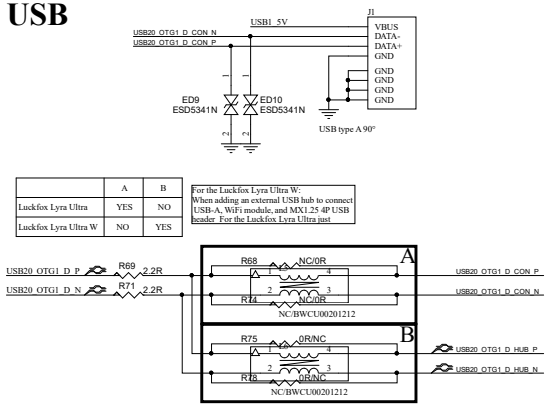

	A	B
Luckfox Lyra Ultra	YES	NO
Luckfox Lyra Ultra W	NO	YES

For the Luckfox Lyra Ultra W:
When adding an external USB hub to connect USB-A, WiFi module, and MX1.25 4P USB header. For the Luckfox Lyra Ultra just

GPIO

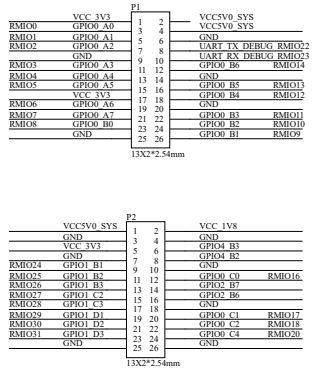

SPEAKER PA

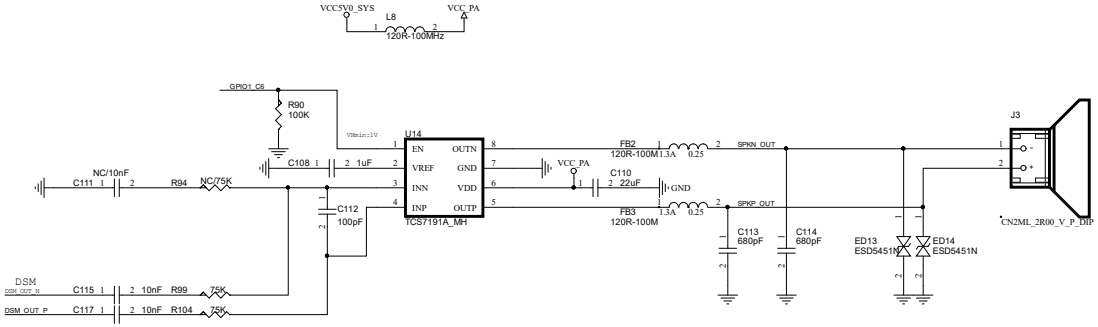

DSI

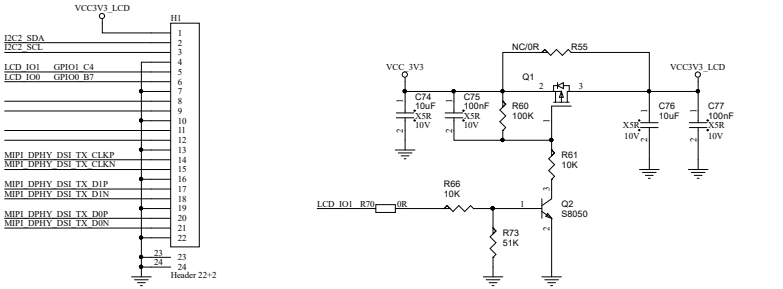

WIFI

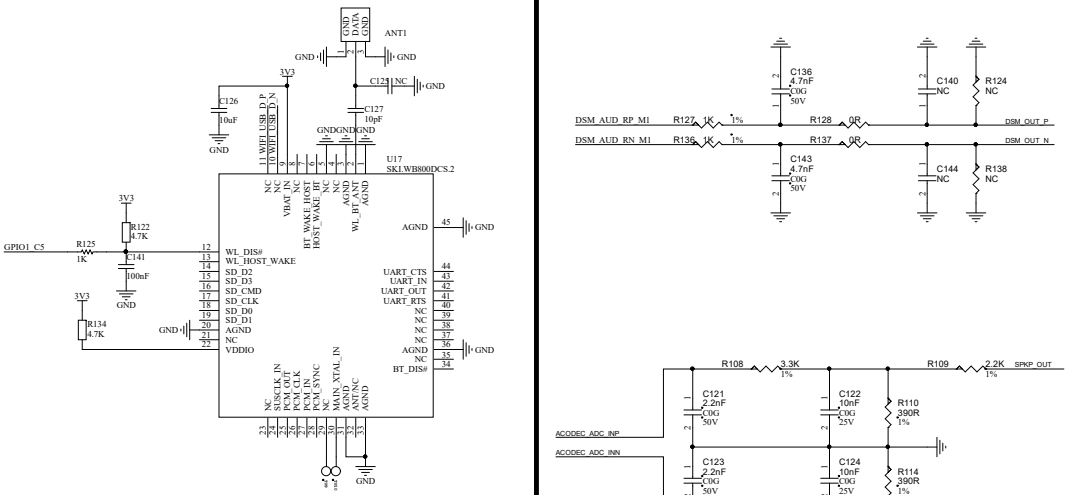

RTC

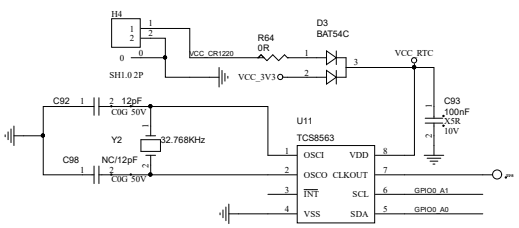
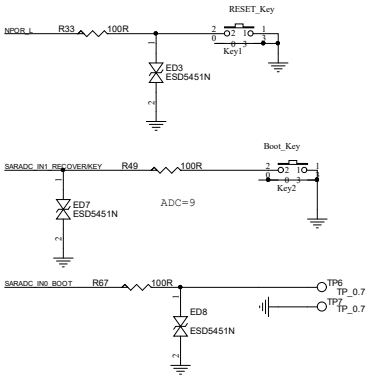
KEY